REVISIONS				
ZONE	REV	DESCRIPTION	DATE	APPROVED

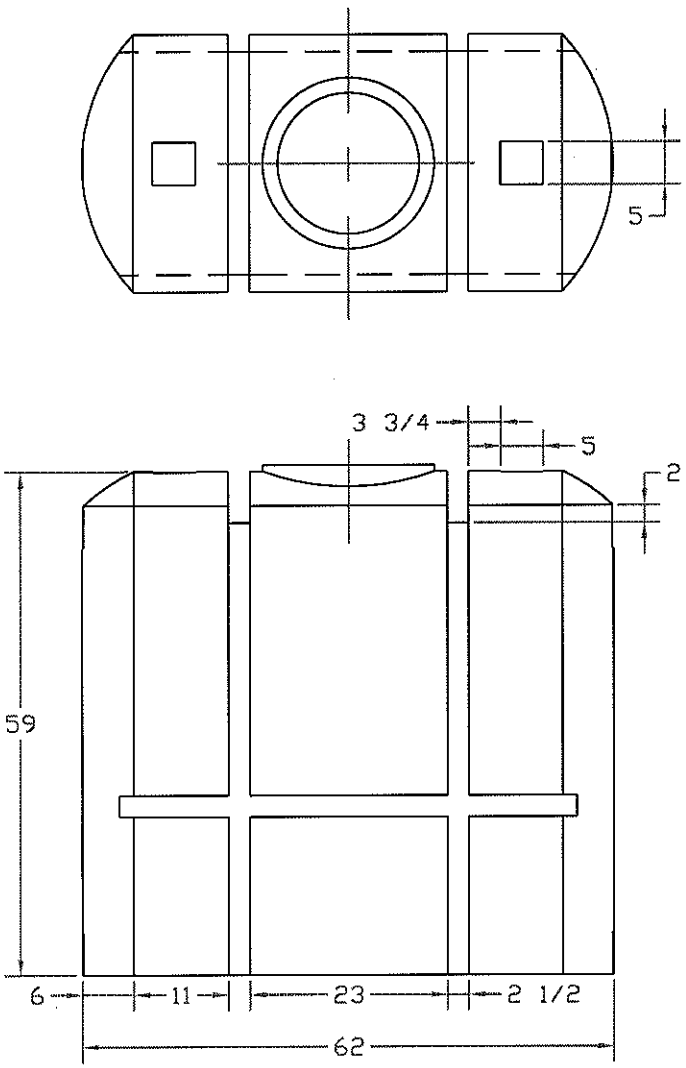

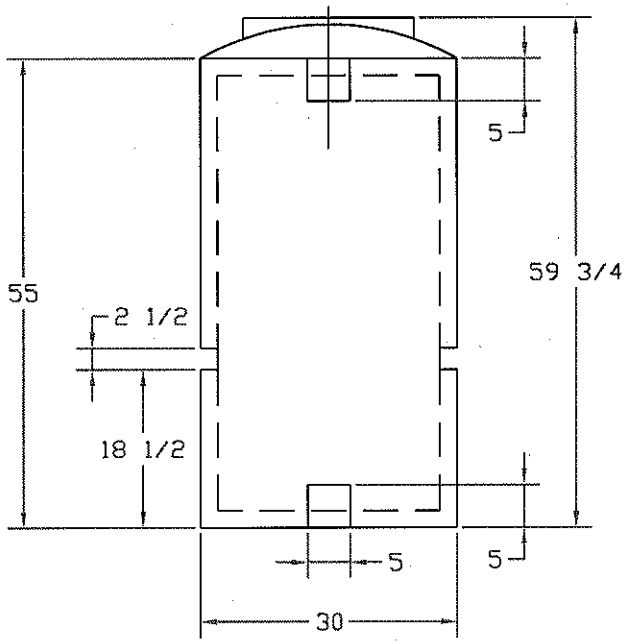

NORWESCO
ST. BONIFACIUS, MN

375 GALLON WATER TANK

JTP 05DEC94	SIZE B	FSCM NO.	DWG NO.	REV
	SCALE 1/16		SHEET 1 OF 2	